DIGITUS LED LED/Monitor LCD com montagem mural

DA-90357
EAN 4016032382706

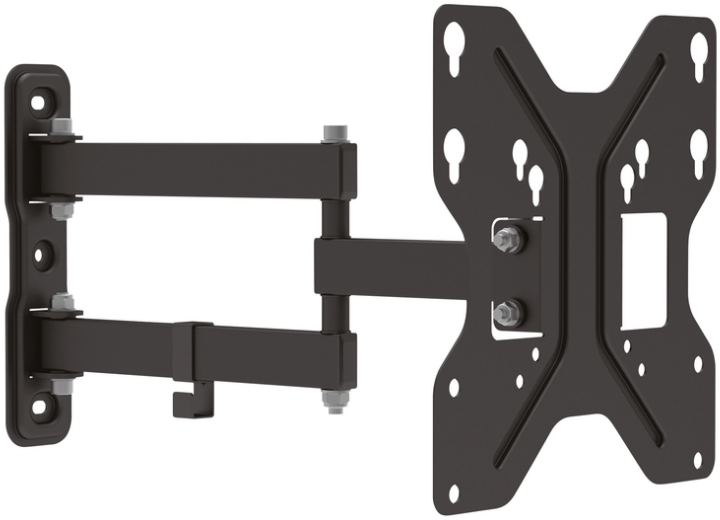

3D Universal TV/Monitor Mount up to 107cm (42") 15ø Tilt, 180ø Swivel, max 30kg, VESA max 200x200

Suporte de parede universal para uma orientação totalmente flexível do monitor, de acordo com a sua posição de visualização através de três níveis reguláveis. O suporte de parede universal permite a montagem de monitores LED e LCD e de ecrãs de televisores de todas as marcas até uma dimensão de 107 cm. Tenha apenas atenção à dimensão VESA, bem como ao peso do seu monitor, de modo a escolher o suporte adequado.

Suporte de parede universal com possibilidades de regulação em todas as três dimensões

- Adequado para distâncias de acordo com norma VESA 75 x 75, 100 x 100, 200 x 100 e 200 x 200mm
- Para dispositivos de montagem mural com um ecrã diagonal de 48cm (19") até 107cm (42")
- Capacidade de suporte de carga máxima até 30kg
- Peso: 1,7 kg

Package contents

- Montagem mural de TV
- Parafusos para a montagem do monitor
- Manual de instruções

Logistics						
	Number (pcs)	Weight (kg)	Depth (cm)	Width (cm)	Height (cm)	cm³
Packaging Unit Carton	7	16.40	28.00	47.00	26.50	34,874.00
Packaging Unit Inside	1	2.34	0.00	0.00	0.00	0.00
Packaging Unit Single	1	2.34	24.50	26.50	6.30	4,090.27
Net single without Packaging	1	1.90	23.00	39.30	24.00	0.00

More images:

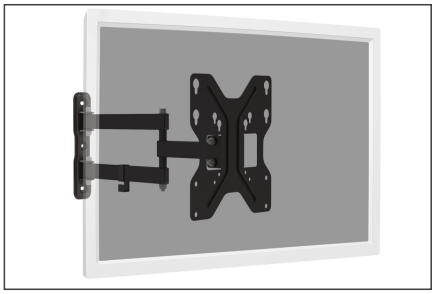

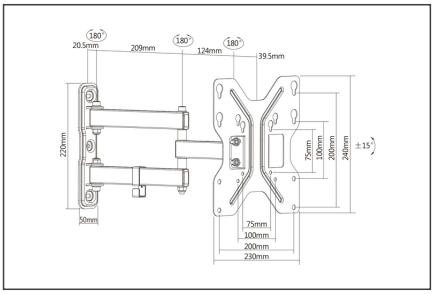

Safety notes

- Please read the entire manual before starting assembly and installation. Please contact your local dealer if you have any questions about the

instructions or warnings.
- CAUTION: Use with products that exceed the permitted weight may result in damage or possible injury.
- Brackets should be fitted in accordance with the installation instructions. Incorrect installation can result in damage or injury.
- Use safety equipment and suitable tools. The product should only be installed by specialists.
- This product can be installed on timber-framed, solid concrete or stone walls.
- The load-bearing surfaces should be able to safely withstand the entire weight of appliances and all additional components.
- Only use the installation screws supplied and DO NOT TIGHTEN the screws TOO TIGHT.
- This product contains small parts that can cause a choking hazard if swallowed. Keep these parts away from children.
- Only use this product indoors. Using the product outdoors can lead to injuries and damage.
- IMPORTANT: Before installation, please check all components received against the components list. If parts are damaged or missing, ask your local dealer for replacement parts.
- MAINTENANCE: Check the bracket regularly for safety and stability (preferably every three months).

EU responsible person

EU based economic operator ensuring the product complies with the required regulations.

ASSMANN Electronic GmbH
Auf dem Schüffel 3
Lüdenscheid, Germany
https://www.assmann.com
info@assmann.com